Smart encoders & actuators

User's guide

AMM80

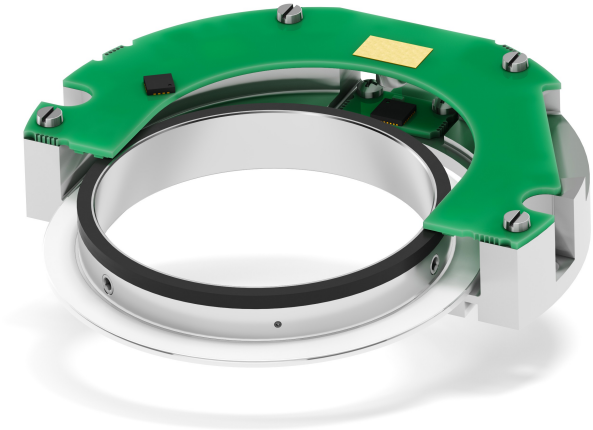

Absolute kit encoder

- Kit encoder with optical and magnetic scanning
- Compact and low-profile design for comfortable installation
- Up to 23 bit singleturn resolution + 1 or 65,536 revolutions
- SSI, BiSS C-mode, & RS-485 interfaces + Sine-Cosine 1Vpp track
- Direct integration into robots, motors and OEM applications

Suitable for the following models:

- AMM80xx/xxxBG1-...
- AMM80xx/xxxSC1-...
- AMM80xx/xxxJP1-...

General contents

Preliminary information	7
1 - Safety summary	8
2 - Identification	11
3 - Mounting instructions	12
4 - Electrical connections	19
5 - SSI interface	30
6 - BiSS C-mode interface	34
7 – RS-485 serial interface	44
8 - Sine/Cosine output signals	52
9 - Diagnostic LEDs	54

This publication was produced by Lika Electronic s.r.l. 2020. All rights reserved. Tutti i diritti riservati. Alle Rechte vorbehalten. Todos los derechos reservados. Tous droits réservés.

This document and information contained herein are the property of Lika Electronic s.r.l. and shall not be reproduced in whole or in part without prior written approval of Lika Electronic s.r.l. Translation, reproduction and total or partial modification (photostat copies, film and microfilm included and any other means) are forbidden without written authorisation of Lika Electronic s.r.l.

The information herein is subject to change without notice and should not be construed as a commitment by Lika Electronic s.r.l. Lika Electronic s.r.l. reserves the right to make all modifications at any moments and without forewarning.

This manual is periodically reviewed and revised. As required we suggest checking if a new or updated edition of this document is available at Lika Electronic s.r.l.'s website. Lika Electronic s.r.l. assumes no responsibility for any errors or omissions in this document. Critical evaluation of this manual by the user is welcomed. Your comments assist us in preparation of future documentation, in order to make it as clear and complete as possible. Please send an e-mail to the following address info@lika.it for submitting your comments, suggestions and criticisms.

lika

Table of Contents

User's guide 1
Table of Contents 3
Subject Index 5
Typographic and iconographic conventions 6
Preliminary information 7
1 - Safety summary 8
1.1 Safety 8
1.2 Electrical safety 8
1.3 Mechanical safety 8
1.4 Specific handling and cleaning instructions and safety information against electrostatic discharges 9
2 - Identification 11
3 - Mounting instructions 12
3.1 Mechanical characteristics of the mounting support 12
3.2 Encumbrance sizes 14
3.3 Mounting the code disk 15
3.4 Mounting the encoder 16
4 - Electrical connections 19
4.1 Hirose DF19G-14S-1H(54) male connector (...-X1 order code) 19
4.1.1 SSI and BiSS C-mode connection (...BG1-... and ...SC1-... order codes) 19
4.1.2 SSI and BiSS C-mode mating cable connection (...G1-... and ...SC1-... order codes) 20
4.1.3 RS-485 connection (...JP1-... order code) 20
4.1.4 RS-485 mating cable connection (...JP1-... order code) 21
4.2 Molex 53261-1271 male connector (...-X2 order code) 22
4.2.1 SSI and BiSS C-mode connection (...BG1-... and ...SC1-... order codes) 22
4.2.2 SSI and BiSS C-mode mating cable connection (...G1-... and ...SC1-... order codes) 23
4.2.3 RS-485 connection (...JP1-... order code) 23
4.2.4 RS-485 mating cable connection (...JP1-... order code) 24
4.3 TF12 cable specifications 24
4.4 Ground connection 24
4.5 Battery power supply 25
4.5.1 Replacement of the battery – No ERROR active 25
4.5.2 Replacement of the battery – ERROR active 26
4.6 1Vpp sinusoidal output signals 27
4.7 Diagnostic LEDs 27
4.8 Zero setting / Preset input 28
4.9 Counting direction input 28
5 - SSI interface 30
5.1 SSI (Synchronous Serial Interface) 30
5.2 "MSB left aligned" protocol 31
5.3 Recommended transmission rates 32
5.4 Recommended SSI input circuit 33
6 - BiSS C-mode interface 34
6.1 Communication 34
6.2 Single Cycle Data SCD 35
6.2.1 SCD structure 35

Position....35
Error....35
Warning....36
CRC....36
6.3 Control Data CD....37
Register address....37
RW....37
DATA....37
CRC....37
6.4 Implemented registers....38
Preset....38
Preset setting enable....41
Serial number....41
Command....42
Save parameters....42
Activate Preset....42
Device ID....42
Manufacturer ID....42
6.5 Application notes....43
6.6 Recommended BiSS input circuit....43
7 – RS-485 serial interface....44
7.1 RS-485 port settings....44
7.2 Frame format....44
7.2.1 Encoder data capture and reset....44
7.2.2 Write register....44
7.2.3 Read register....45
7.3 Field detail....45
7.3.1 Control Field....45
7.3.2 Status Field....45
7.4 Data Field....46
7.4.1 Encoder errors....47
BUSY flag....47
PS error....47
ST error....47
Battery alarm....47
MT error....47
7.4.2 Resetting an error....48
7.5 Address Field and EEPROM Data Field....49
MEM BUSY....49
7.6 CRC Field....50
8 - Sine/Cosine output signals....52
8.1 Output signals voltage level....52
9 - Diagnostic LEDs....54
10 - Default parameters list....56

Subject Index

A
Activate Preset....42

C
Command....42
CRC....36, 37

D
DATA....37
Device ID....42

E
Error....35

M
Manufacturer ID....42

P
Position....35
Preset....38
Preset setting enable....41

R
Register address....37
RW....37

S
Save parameters....42
Serial number....41

W
Warning....36

Typographic and iconographic conventions

In this guide, to make it easier to understand and read the text the following typographic and iconographic conventions are used:

- parameters and objects both of Lika device and interface are coloured in GREEN;
- alarms are coloured in RED;
- states are coloured in FUCSIA.

When scrolling through the text some icons can be found on the side of the page: they are expressly designed to highlight the parts of the text which are of great interest and significance for the user. Sometimes they are used to warn against dangers or potential sources of danger arising from the use of the device. You are advised to follow strictly the instructions given in this guide in order to guarantee the safety of the user and ensure the performance of the device. In this guide the following symbols are used:

	This icon, followed by the word **WARNING**, is meant to highlight the parts of the text where information of great significance for the user can be found: user must pay the greatest attention to them! Instructions must be followed strictly in order to guarantee the safety of the user and a correct use of the device. Failure to heed a warning or comply with instructions could lead to personal injury and/or damage to the unit or other equipment.
	This icon, followed by the word **NOTE**, is meant to highlight the parts of the text where important notes needful for a correct and reliable use of the device can be found. User must pay attention to them! Failure to comply with instructions could cause the equipment to be set wrongly: hence a faulty and improper working of the device could be the consequence.
	This icon is meant to highlight the parts of the text where suggestions useful for making it easier to set the device and optimize performance and reliability can be found. Sometimes this symbol is followed by the word **EXAMPLE** when instructions for setting parameters are accompanied by examples to clarify the explanation.

Preliminary information

This guide is designed to provide the most complete and exhaustive information the operator needs to correctly and safely install and operate the **AMM80 absolute kit encoder**.
This encoder is available with the following interfaces:

- SSI interface;
- BiSS C-mode interface;
- RS-485 serial interface.

AMM80 encoder can be both singleturn and multiturn.
Singleturn resolution can be 17 bits (131,072 cpr), 20 bits (1,048,576 cpr), and 23 bits (8,388,608 cpr).
In multiturn versions, the number of revolutions is 65,536.
It further provides additional 1Vpp Sine-Cosine signals for speed feedback (1,024 sinusoidal signals per revolution).
AMM80 is ideal for integration into space critical applications such as robots, robotic joints, hollow shaft motors (direct drive torque motors, ...), brushless and servo motors, electric actuators, electro-medical devices, OEM equipment.

To make it easier to read and understand the text, this guide can be divided into some main sections.
In the first section some general information concerning the safety, the mechanical installation and the electrical connection as well as tips for setting up and running properly and efficiently the unit are provided.
In the second section, entitled **SSI interface**, both general and specific information is given on the SSI interface, see on page 30.
In the third section, entitled **BiSS C-mode interface**, both general and specific information is given on the BiSS C-mode interface. In this section the parameters implemented in the unit are fully described. See on page 34.
In the fourth section, entitled **RS-485 serial interface**, both general and specific information is given on the serial interface, see on page 44.

WARNING
Light alters significantly the proper operation of the system.
Please mount the motor cap and protect the encoder from light sources before starting the system and checking its operation. The encoder has been calibrated to perform at its best without any light interference.

WARNING
The encoder must be adequately protected under an enclosure appropriate for the specific application.

1 - Safety summary

1.1 Safety

- Always adhere to the professional safety and accident prevention regulations applicable to your country during device installation and operation;
- installation and maintenance operations have to be carried out by qualified personnel only, with power supply disconnected and stationary mechanical parts;
- device must be used only for the purpose appropriate to its design: use for purposes other than those for which it has been designed could result in serious personal and/or the environment damage;
- high current, voltage and moving mechanical parts can cause serious or fatal injury;
- warning! Do not use in explosive or flammable areas;
- failure to comply with these precautions or with specific warnings elsewhere in this manual violates safety standards of design, manufacture, and intended use of the equipment;
- Lika Electronic assumes no liability for the customer's failure to comply with these requirements.

1.2 Electrical safety

- Turn off the power supply before connecting the device;
- connect according to explanation in the "4 - Electrical connections" section on page 19;
- in compliance with the 2014/30/EU norm on electromagnetic compatibility, following precautions must be taken:

  - before handling and installing, discharge electrical charge from your body and tools which may come in touch with the device;
  - power supply must be stabilized without noise, install EMC filters on device power supply if needed;
  - always use shielded cables (twisted pair cables whenever possible);
  - avoid cables runs longer than necessary;
  - avoid running the signal cable near high voltage power cables;
  - mount the device as far as possible from any capacitive or inductive noise source, shield the device from noise source if needed;
  - to guarantee a correct working of the device, avoid using strong magnets on or near by the unit;
  - minimize noise by connecting the shield and/or the frame to ground. Make sure that ground is not affected by noise. The connection point to ground can be situated both on the device side and on user's side. The best solution to minimize the interference must be carried out by the user.

1.3 Mechanical safety

- Install the device following strictly the information in the "3 - Mounting instructions" section on page 12;
- mechanical installation has to be carried out with stationary mechanical parts;

- do not disassemble the encoder;
- do not tool the encoder or the disk/ring;
- delicate electronic equipment: handle with care; do not subject the device and the disk/ring to knocks or shocks;
- respect the environmental characteristics declared by manufacturer;
- the encoder must be adequately protected under an enclosure appropriate for the specific application.

1.4 Specific handling and cleaning instructions and safety information against electrostatic discharges

Please be sure to strictly observe the following safety precautions and instructions before handling and installing the kit encoder.

- Open the box and handle the electronic components only within an EPA (Electrostatic Protective Area) and when you are properly grounded;
- before handling the kit encoder the operator must wear:
  - a wrist strap; it must be worn on the hand and connected to ground through a 1 megohm resistor;
  - an ESD smock made of dissipative material;
  - dissipative gloves; they are further used not to dirty the code disk while mounting;
- always handle the encoder by grasping the enclosure on the sides;
- the code disk must always be handled by grasping its outer edges or the magnetic ring;
- avoid flexing the disk, exposing it to direct sunlight, excessive heat and/or humidity;
- if dust or fingerprints get on to the disk, wipe with a soft dry cloth or camera lens tissue; wipe the disk using circular motions; more stubborn fingerprints or stains can be removed using a soft cloth lightly moistened with a few drops of alcohol; do not use gasoline, kerosene, benzene or other solvents, as they damage the disk.

CAUTION

Keep magnets away from the magnetic ring in the code disk, it could be damaged by strong magnetic fields.

2 - Identification

Device can be identified through the **order code** and the **serial number** printed on the label applied to its body. Information is listed in the delivery document too. Please always quote the order code and the serial number when reaching Lika Electronic. For any information on the technical characteristics of the product refer to the technical catalogue.

Warning: encoders having order code ending with "/Sxxx" may have mechanical and electrical characteristics different from standard and be supplied with additional documentation for special connections (Technical Info).

3 - Mounting instructions

WARNING
Installation must be carried out by qualified personnel only, with power supply disconnected and mechanical parts compulsorily in stop.

WARNING
Before handling and mounting the device please be sure to read carefully the handling instructions and safety information reported in the "1.4 Specific handling and cleaning instructions and safety information against electrostatic discharges" section on page 9.

3.1 Mechanical characteristics of the mounting support

This kit encoder is specifically designed for installation in motors having the mechanical characteristics indicated in the following drawings: shaft and flange with pilot (Figure 1) and shaft and flange with pins (Figure 2).

(values are expressed in mm)

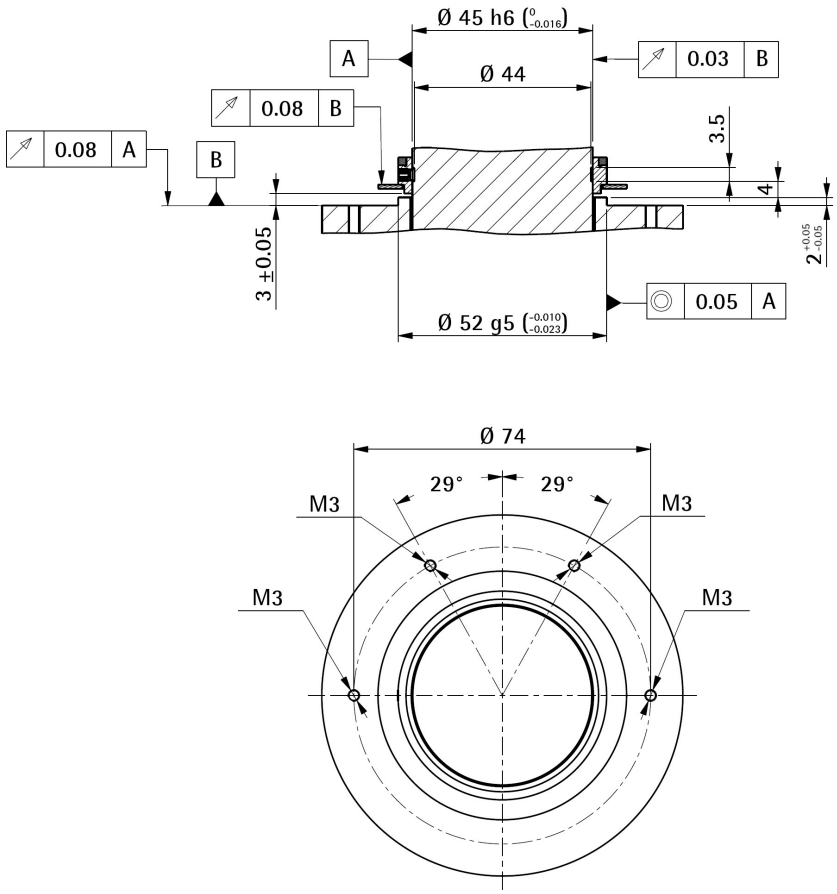

Figure 1 - Flange with pilot

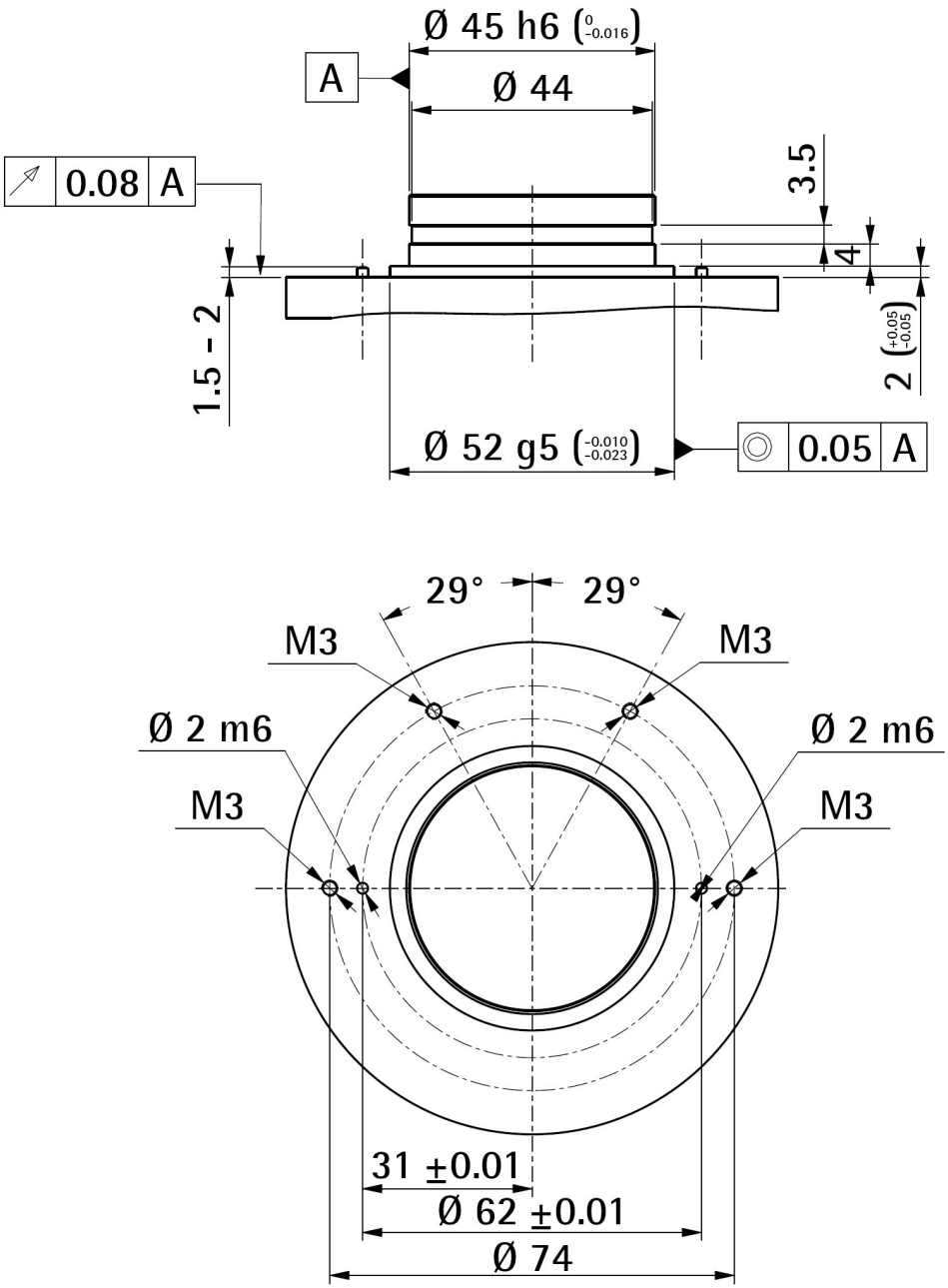

Figure 2 - Flange with pins

3.2 Encumbrance sizes

(values are expressed in mm)

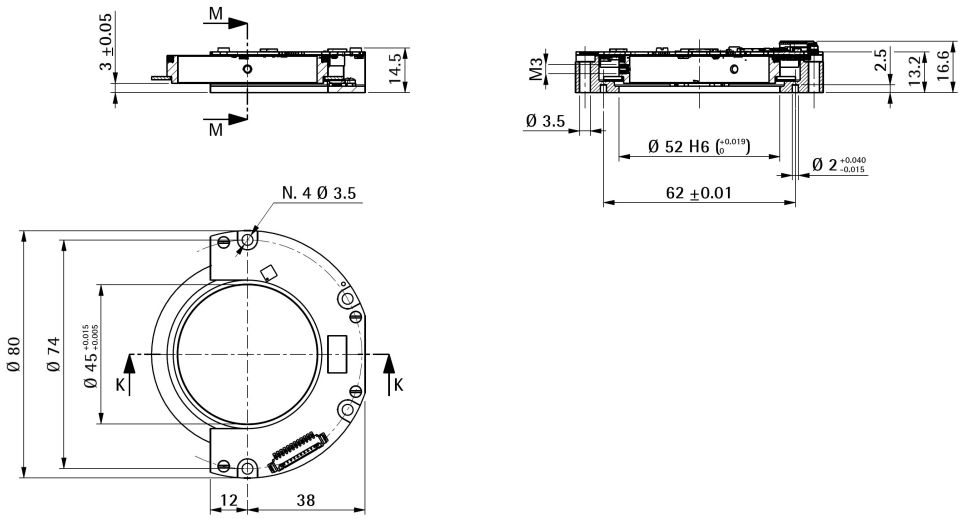

Figure 3 - Encumbrance sizes of the encoder

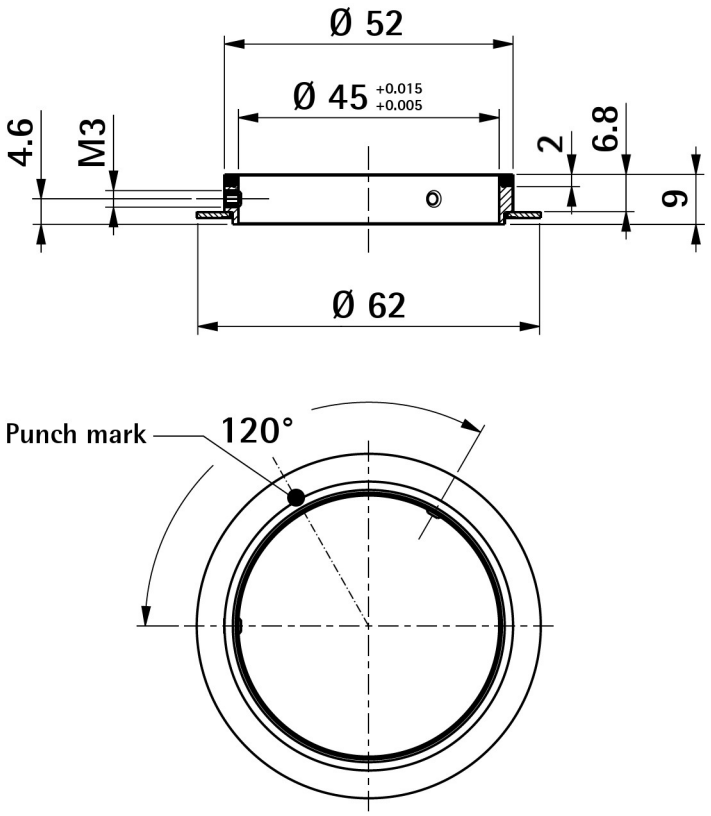

Figure 4 - Encumbrance sizes of the code disk

3.3 Mounting the code disk

WARNING

- The encoder must be adequately protected under an enclosure appropriate for the specific application;
- before installation, carefully clean the code disk from dust or fingerprints, wipe it with a soft dry cloth or camera lens tissue; wipe the disk using circular motions; more stubborn fingerprints or stains can be removed using a soft cloth lightly moistened with a few drops of alcohol; do not use gasoline, kerosene, benzene or other solvents, as they damage the disk;
- the code disk must always be handled by grasping its outer edges or the magnetic ring;
- protect the disk from scratching;
- avoid flexing the disk;
- always handle the encoder unit by grasping the enclosure on the sides;
- keep magnets away from the magnetic ring in the code disk, it could be damaged by strong magnetic fields.

Step 1

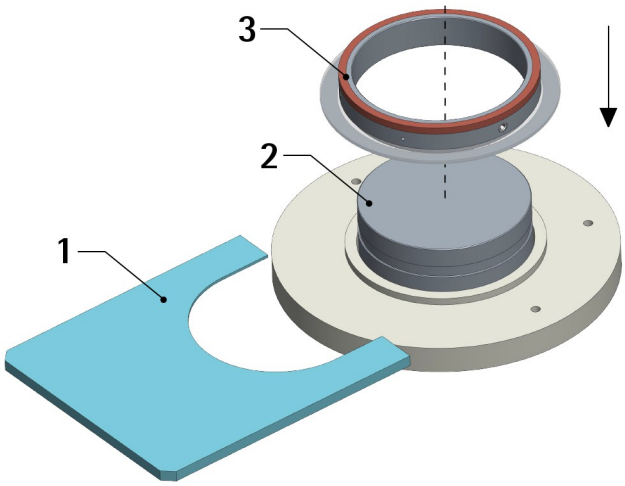

Place the **PF5025** spacing tool **1** against the shaft **2**. Insert the code disk **3** into the shaft **2** and lay it down on the spacing tool **1**; always handle the code disk **3** by grasping its outer edges or the magnetic ring.

Step 2

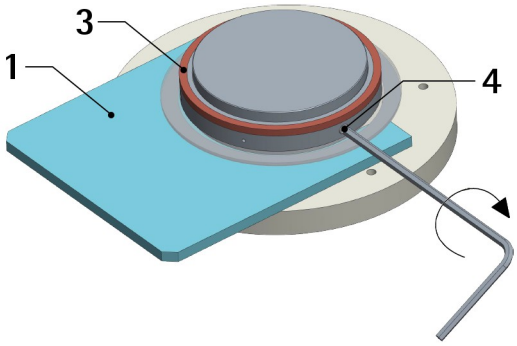

Gently press the code disk **3** into place on the **PF5025** spacing tool **1**. Tighten the two M3 x 3 UNI5929 grub screws **4** to firmly fasten the code disk **3**; make sure that the code disk **3** perfectly rests on the spacing tool **1** before fixing it; the max. tightening torque is **1.3 Nm**.

WARNING
Please ensure that the grub screws **4** are tightened properly and do not stick out of their housing. Make sure that they do not hit the encoder unit **5**, they may damage the LEDs.

3.4 Mounting the encoder

WARNING
Always handle the encoder unit by grasping the enclosure on the sides.

Step 3

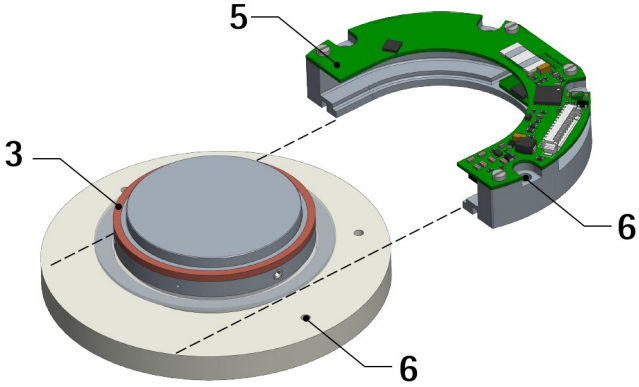

Slide the encoder unit **5** over the code disk **3** until the screw holes **6** match up; follow the pilot on the flange or mount according to the pins; make sure that the enclosure of the encoder unit **5** does not hit or touch the code disk **3**; always handle the encoder unit **5** by holding the enclosure on the sides.

Step 4

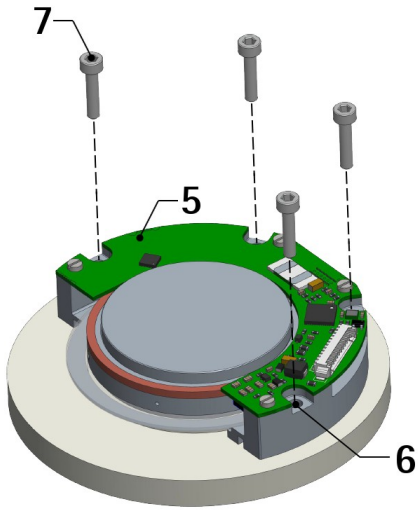

Insert the M3 x 8 cylinder-head bolts UNI5931 **7** in the holes **6**, tighten the four bolts **7** down to firmly fix the encoder unit **5**, torque to **1.3 Nm** max. Hold the encoder unit **5** down and avoid any movements while tightening.

Step 5

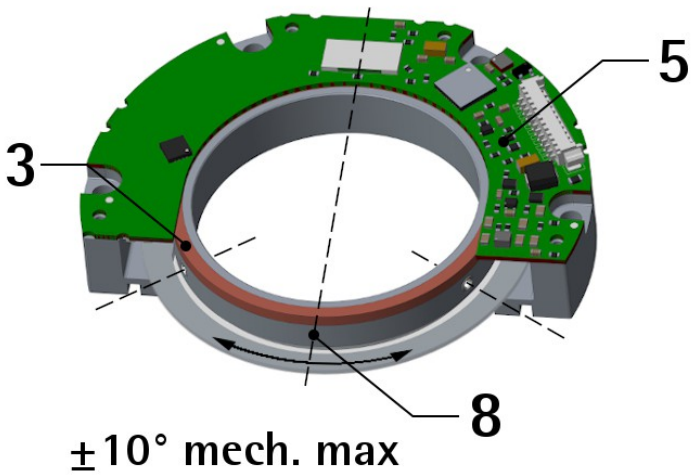

Rotate the motor shaft until the code disk **3** is aligned with the encoder unit **5** as shown in the Figure; the mark **8** punched in the code disk **3** must be centred in the encoder unit **5** as shown in the Figure. Max. misalignment allowed: ± 10 mechanical degrees.

WARNING

If you do not align the code disk **3** with the encoder unit **5**, the encoder will send back an error at power-on. Should this happen, switch the power supply off, align the code disk **3** properly and then proceed again as explained in the next step.

Step 6

Connect the **EC-DF19-LK-TF12-...** cable to the Hirose connector of the encoder unit **5**; or connect the **EC-X14-LK-TF12-...** cable to the Molex connector of the encoder unit **5**. Please make sure that the power supply is off and the battery is not wired before connecting the cable.

Step 7

Connect the battery.

Step 8

Switch the power supply on. If the installation procedure is successful, the LEDs will blink for a while and then go off.
If at the end of the operation a LED is still on, please repeat the procedure again.
Refer also to the "9 - Diagnostic LEDs" section on page 54.

WARNING
Light alters significantly the proper operation of the system.
Please mount the motor cap and protect the encoder from light sources before starting the system and checking its operation. The encoder has been calibrated to perform at its best without any light interference.

4 - Electrical connections

WARNING
Power supply must be turned off before performing any electrical connection!
If wires of unused signals come in contact, irreparable damage could be caused to the device. Thus they must be cut at different lengths and insulated singularly.

4.1 Hirose DF19G-14S-1H(54) male connector (...-X1 order code)

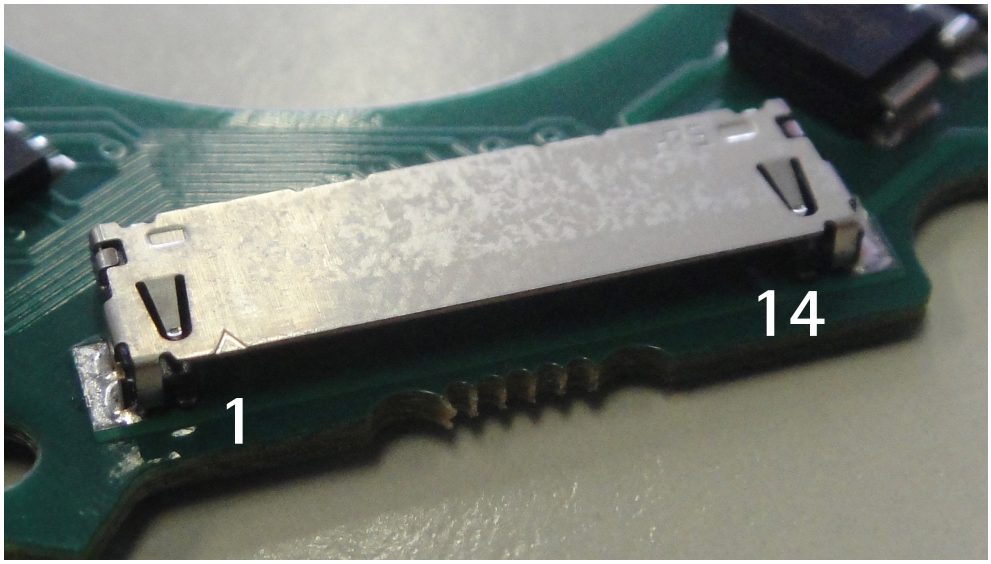

4.1.1 SSI and BiSS C-mode connection (...BG1-... and ...SC1-... order codes)

Function	Pin
Ground	1
Data OUT - / SLO -	2
Data OUT + / SLO +	3
Clock IN - / MA -	4
Clock IN + / MA +	5
/A (cos -)	6
A (cos +)	7
/B (sin -)	8
B (sin +)	9
+Vb *	10
0Vb *	11
not connected	12
+5Vdc ±5%	13
0Vdc	14

* Only available with multiturn encoder versions (.../65K... order code)

Mating connector: Hirose DF19G-14S-1C(05) female connector

4.1.2 SSI and BiSS C-mode mating cable connection (...G1-... and ...SC1-... order codes)

EC-DF19-LK-TF12-... cable, it must be ordered separately

Function	TF12 cable
Data OUT - / SLO -	Pink
Data OUT + / SLO +	Grey
Clock IN - / MA -	Yellow
Clock IN + / MA +	Violet
/A (cos -)	Brown
A (cos +)	Green
/B (sin -)	Black
B (sin +)	Red
+Vb *	White
0Vb *	Blue
+5Vdc ±5%	Brown_Green
0Vdc	White_Green

* Only available with multiturn encoder versions (.../65K... order code)

4.1.3 RS-485 connection (...JP1-... order code)

Function	Pin
Ground	1
B (RS-485)	2
A (RS-485)	3
not used	4
not used	5
not to be connected	6
not to be connected	7
not to be connected	8
not to be connected	9
+Vb *	10
0Vb *	11
reserved	12
+5Vdc ±5%	13
0Vdc	14

* Only available with multiturn encoder versions (.../65K... order code)

Mating connector: Hirose DF19G-14S-1C(05) female connector

4.1.4 RS-485 mating cable connection (...JP1-... order code)

EC-DF19-LK-TF12-... cable, it must be ordered separately

Function	TF12 cable
B (RS-485)	Pink
A (RS-485)	Grey
not used	Yellow
not used	Violet
not to be connected	Brown
not to be connected	Green
not to be connected	Black
not to be connected	Red
+Vb *	White
0Vb *	Blue
+5Vdc ±5%	Brown_Green
0Vdc	White_Green

* Only available with multiturn encoder versions (.../65K... order code)

WARNING
When the power is switched on, above 3V supply voltage +Vdc must be applied with a slew rate larger than 50V/s.

4.2 Molex 53261-1271 male connector (...-X2 order code)

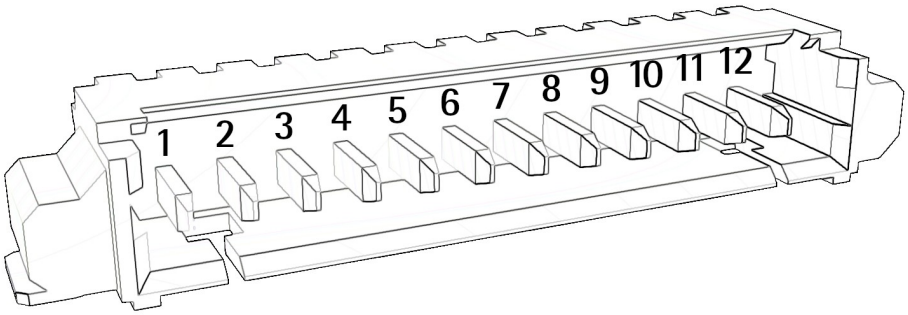

NOTE
Molex 53261-1271 connector is available only in AMM80xx/1... versions (singleturn resolution only)

4.2.1 SSI and BiSS C-mode connection (...BG1-... and ...SC1-... order codes)

Function	Pin
0Vdc	1
+5Vdc ±5%	2
Clock IN + / MA +	3
Clock IN - / MA -	4
Data OUT + / SLO +	5
Data OUT - / SLO -	6
B (sin +)	7
/B (sin -)	8
A (cos +)	9
/A (cos -)	10
Zero setting / Preset	11
Counting direction	12

Mating connector: Molex 51021-1200 female connector

4.2.2 SSI and BiSS C-mode mating cable connection (...G1-... and ...SC1-... order codes)

EC-X14-LK-TF12-... cable, it must be ordered separately

Function	TF12 cable
0Vdc	White_Green
+5Vdc ±5%	Brown_Green
Clock IN + / MA +	Violet
Clock IN - / MA -	Yellow
Data OUT + / SLO +	Grey
Data OUT - / SLO -	Pink
B (sin +)	Red
/B (sin -)	Black
A (cos +)	Green
/A (cos -)	Brown
Zero setting / Preset	White
Counting direction	Blue

4.2.3 RS-485 connection (...JP1-... order code)

Function	Pin
0Vdc	1
+5Vdc ±5%	2
not used	3
not used	4
A (RS-485)	5
B (RS-485)	6
not to be connected	7
not to be connected	8
not to be connected	9
not to be connected	10
Zero setting / Preset	11
Counting direction	12

Mating connector: Molex 51021-1200 female connector

4.2.4 RS-485 mating cable connection (...JP1-... order code)

EC-X14-LK-TF12-... cable, it must be ordered separately

Function	TF12 cable
0Vdc	White_Green
+5Vdc ±5%	Brown_Green
not used	Violet
not used	Yellow
A (RS-485)	Grey
B (RS-485)	Pink
not to be connected	Red
not to be connected	Black
not to be connected	Green
not to be connected	Brown
Zero setting / Preset	White
Counting direction	Blue

WARNING
When the power is switched on, above 3V supply voltage +Vdc must be applied with a slew rate larger than 50V/s.

4.3 TF12 cable specifications

Model	: LIKA TF12 encoder cable
Cross section	: 6 x 2 x 28AWG
Jacket	: Special flame retardant PVC compound, RZ-TM2 quality
Shield	: Tinned copper braid, coverage > 80% with tinned copper drain wire
Outer diameter	: 5.4 mm ±0.1 mm (0.213" ±0.004")
Min. bending radius	: outer diameter x 10
Work temperature	: -15°C +80°C (+5°F +176°F)
Conductor resistance	: < 242.02 Ω/Km (+20°C / -4°F) (UL 758 table 5.2.1)

4.4 Ground connection

Minimize noise by connecting the device to ground. Use the pin 1 (Hirose connector only) to connect the encoder to ground. Make sure that ground is not affected by noise.

4.5 Battery power supply

NOTE
Battery power supply is only available in multiturn encoder versions (.../65K... order code) with Hirose DF19G-14S-1H(54) connector (...-X1 order code).

+Vb / 0Vb: battery supply voltage comprised between 3V and 5.5V, it is typically 3.6V.

4.5.1 Replacement of the battery – No ERROR active

NOTE
Follow this procedure if, at power-on, both LEDs are off and no BiSS alarm is active; or if only the WARNING LED and the WARNING bit are active. After the procedure is carried out, the absolute position of the encoder is retained.

1. Stop the disk at any point;	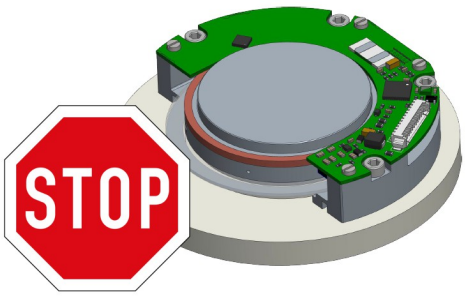
2. the 5Vdc power supply must be on;	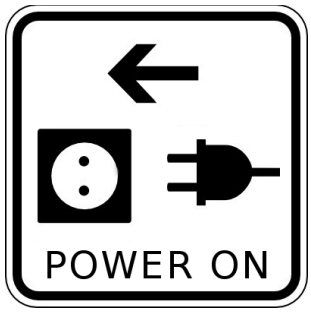
3. remove the spent battery;	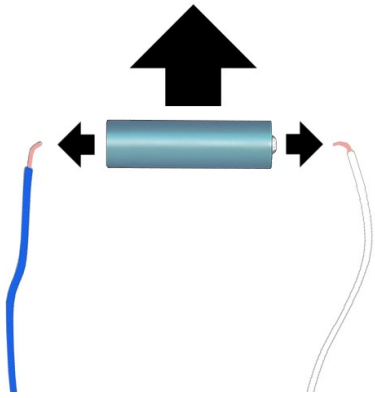

WARNING
Now you are required to replace the battery **within 60 seconds**!

4. install and connect the new battery;	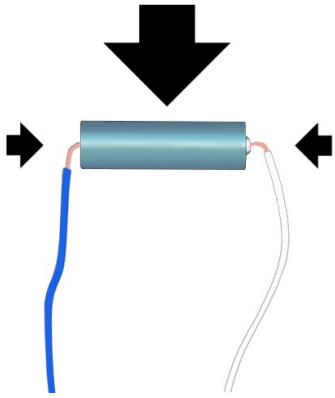
5. switch the 5Vdc power supply off;	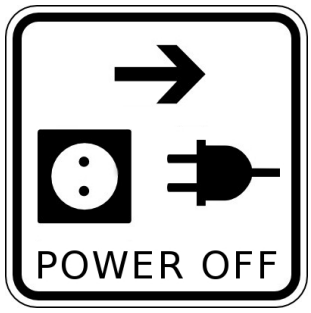
6. switch the 5Vdc power supply on;	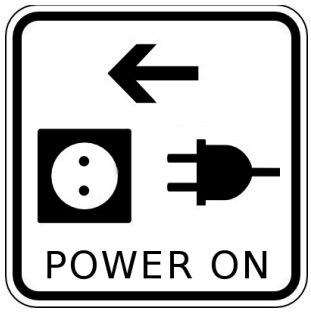

7. the singleturn and multiturn positions are provided properly (the position is exactly the same the encoder was in when you stopped it);
8. if you turn the disk, both WARNING and ERROR LEDs are off.

4.5.2 Replacement of the battery – ERROR active

NOTE
Follow this procedure if, at power-on, the ERROR bit and/or the ERROR LED are active.

1. Stop the disk at any point;
2. switch the 5Vdc power supply off;

3. remove the spent battery;
4. install and connect the new battery;
5. switch the 5Vdc power supply on; the ERROR LED is on or blinks;
6. switch the 5Vdc power supply off;
7. switch the 5Vdc power supply on;
8. the ERROR LED is off;
9. the singleturn and multiturn positions are provided properly: the singleturn position is exactly the same the encoder was in when you stopped it; the multiturn position is different than before;
10. slowly turn the disk: both WARNING and ERROR LEDs must be off;
11. if the ERROR LED lights up, go on turning the disk until the ERROR LED goes off; then go on turning the disk until the ERROR LED lights up again; finally go on turning the disk until the ERROR LED goes off;
12. stop rotating the disk;
13. remove the battery;
14. short-circuit the battery input terminals and discharge the residual voltage (connect the WHITE and BLUE wires);
15. switch the 5Vdc power supply off;
16. install and connect the battery again;
17. switch the 5Vdc power supply on; the ERROR LED is on or blinks;
18. switch the 5Vdc power supply off;
19. switch the 5Vdc power supply on;
20. the ERROR LED is off;
21. if you turn the disk, both WARNING and ERROR LEDs are off.

4.6 1Vpp sinusoidal output signals

NOTE
Sinusoidal output signals are only available in SSI and BiSS C-mode encoder versions (...BG1-... and ...SC1-... order codes).

For any further information on the 1Vpp sinusoidal signals please refer to the "8 - Sine/Cosine output signals" section on page 52.

4.7 Diagnostic LEDs

For any further information on the diagnostic LEDs please refer to the "9 - Diagnostic LEDs" section on page 54.

4.8 Zero setting / Preset input

NOTE
Zero setting / Preset input is only available with Molex 53261-1271 connector (...-X2 order code).

The output position information at a point in the shaft rotation can be set either to 0 (SSI interface) or to a desired value called "preset" (BiSS C-mode interface; the preset value must be set next to the **Preset** registers, see on page 38). The Zero setting / Preset input allows the operator to activate the zero / preset value by using an input signal sent by a PLC or other controller. To activate the zero setting / preset function, connect the Zero setting / Preset input to +Vdc for 100 µs at least, then disconnect +Vdc; normally voltage must be at 0Vdc. Zero setting / Preset must be set after Counting direction. We suggest setting the zero setting / preset function when the encoder shaft is not turning. If not used, connect the Zero setting / Preset input to 0Vdc.

WARNING
In the BiSS C-mode interface model, the Zero setting / Preset input is active only when the **Preset setting enable** register is set to "01", see on page 41; otherwise the hardware function is disabled.

NOTE
In the BiSS interface the preset can be activated also by using the **Activate Preset** function of the **Command** register. For detailed information please refer to the **Preset** registers on page 38 and to the **Command** register on page 42.

4.9 Counting direction input

NOTE
Counting direction input is only available with Molex 53261-1271 connector (...-X2 order code).

The standard counting direction provides the count up information when the shaft/code disk turns as shown in the Figure in the next page (clockwise rotation viewed from the flange side).
The Counting direction input allows to set whether the position value output by the encoder increases when the shaft/code disk rotates clockwise (CW) or counter-clockwise (CCW). The clockwise rotation is intended as shown in the Figure. If the Counting direction input is connected to 0Vdc, the position value increases when the shaft/code disk rotates clockwise; on the contrary, if the Counting direction input is connected to +Vdc, the position value increases when the shaft/code disk rotates counter-clockwise. If not used, connect the Counting direction input to 0Vdc (standard counting direction, see the Figure).

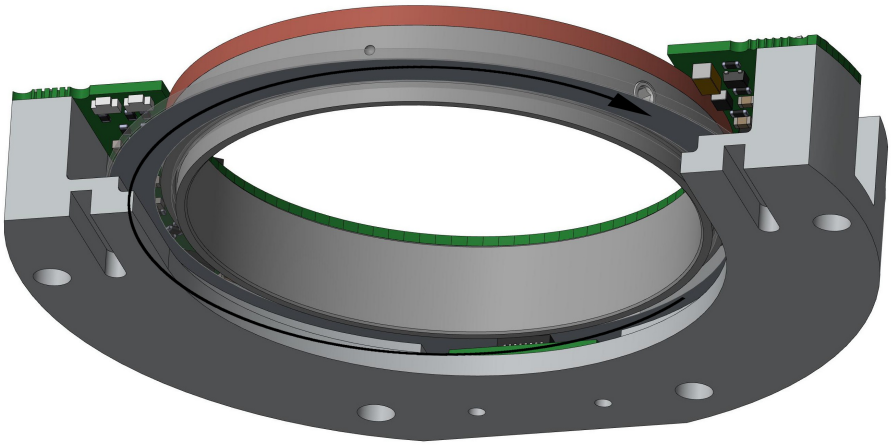

Figure 5 - Standard counting direction

WARNING
Light alters significantly the proper operation of the system.
Please mount the motor cap and protect the encoder from light sources before starting the system and checking its operation. The encoder has been calibrated to perform at its best without any light interference.

5 - SSI interface

Order code: AMM80xx/xxxBG1-...

5.1 SSI (Synchronous Serial Interface)

SSI (the acronym for **Synchronous Serial Interface**) is a synchronous point-to-point serial interface engineered for unidirectional data transmission between one Master and one Slave. Developed in the first eighties, it is based on the RS-422 serial standard. Its most peculiar feature is that data transmission is achieved by synchronizing both the Master and the Slave devices to a common clock signal generated by the controller; in this way the output information is clocked out at each controller's request. Furthermore only two pairs of twisted wires are used for data and clock signals, thus a six-wire cable is required.
The main advantages in comparison with parallel or asynchronous data transmissions are:

- less conductors are required for transmission;
- less electronic components;
- possibility of insulting the circuits galvanically by means of optocouplers;
- high data transmission frequency;
- hardware interface independent from the resolution of the absolute encoder.

Furthermore the differential transmission increases the noise immunity and decreases the noise emissions. It allows multiplexing from several encoders, thus process controls are more reliable with simplified line design and easier data management.

Data transmission is carried out as follows.
At the first falling edge of the clock signal (**1**, the logic level changes from high to low) the absolute position value is stored while at the following rising edge (**2**) the transmission of data information begins starting from the MSB.

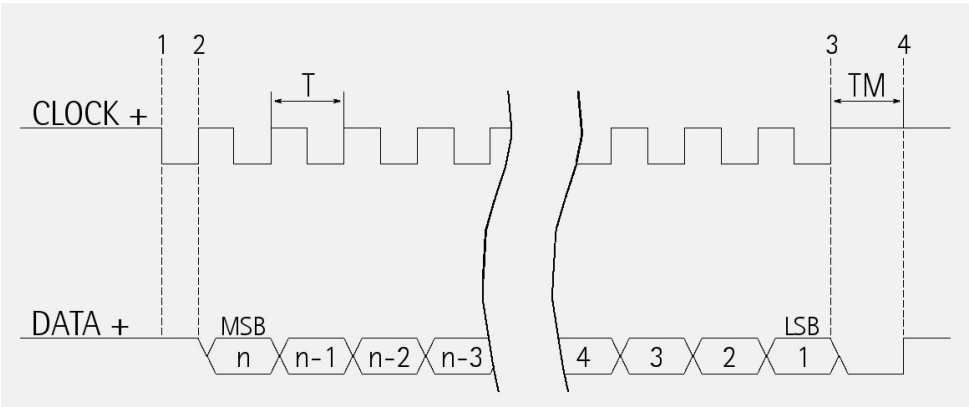

At each change of the clock signal and at each subsequent rising edge (**2**) one bit is clocked out at a time, up to LSB, so completing the data word transmission. The cycle ends at the last rising edge of the clock signal (**3**). This means that up to n + 1 rising edges of the clock signals are required for each data word transmission (where n is the bit resolution); for instance, a 13-bit encoder needs 14 clock edges. If the number of clocks is greater than the number of bits of the data word, then the system will send a zero (low logic level signal) at each additional clock, zeros will either lead (LSB ALIGNED protocol) or follow (MSB ALIGNED protocol) or lead and/or follow (TREE FORMAT protocol) the data word. After the period Tm monoflop time, having a typical duration of 12 µsec, calculated from the end of the clock signal transmission, the encoder is then ready for the next transmission and therefore the data signal is switched high.
The clock signal has a typical logic level of 5V, the same as the output signal which has customarily a logic level of 5V in compliance with RS-422 standard.
The output code can be Binary or Gray (see the order code).

5.2 "MSB left aligned" protocol

"MSB left aligned" protocol allows to left align the bits, beginning from MSB (most significant bit) to LSB (least significant bit); MSB is then sent at the first clock cycle. If the number of clock signals is higher than the data bits, then unused bits are forced to logic level low (0) and follow the data word. This protocol can be used in encoders having any resolution.
The number of clocks to be sent to the encoder must equal the number of data bits at least, anyway it can be higher, as stated previously. The great advantage of this protocol over the TREE format or the LSB RIGHT ALIGNED format is that data can be transmitted with a minimum time loss and Tm monoflop time can immediately follow the data bits without any additional clock signal.
The length of the word is variable according to the resolution, as shown in the following table.

Model	Length of the word	Max. number of information
AMM8017/1BG1...	17 bits	131,072 cpr
AMM8020/1BG1...	20 bits	1,048,576 cpr
AMM8023/1BG1...	23 bits	8,388,608 cpr
AMM8017/65KBG1...	17 + 16 bits	8,589,934,592 cpr
AMM8020/65KBG1...	20 + 16 bits	68,719,476,736 cpr
AMM8023/65KBG1...	23 + 16 bits	549,755,813,888 cpr

The output code is BINARY (see the order code).

Structure of the position information

AMM8017/1BG1...	**bit**	**16**	**...**	**0**
AMM8020/1BG1...	**bit**	**19**	**...**	**0**
AMM8023/1BG1...	**bit**	**22**	**...**	**0**
AMM8017/65KBG1...	**bit**	**32**	**...**	**0**
AMM8020/65KBG1...	**bit**	**35**	**...**	**0**
AMM8023/65KBG1...	**bit**	**38**	**...**	**0**
	value	MSB	...	LSB

5.3 Recommended transmission rates

The SSI interface has a frequency of data transmission ranging between 100 kHz and 4 MHz.
CLOCK IN and DATA OUT signals comply with the "EIA standard RS-422".
The SSI clock frequency (baud rate) depends on the length of the cable and must comply with the technical information reported in the following table:

Cable length	Baud rate
< 50 m	< 400 kHz
< 100 m	< 300 kHz
< 200 m	< 200 kHz
< 400 m	< 100 kHz

The time interval between two Clock sequence transmissions must be at least 20 µs (Tp > 20 µs).

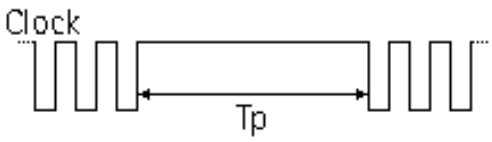

5.4 Recommended SSI input circuit

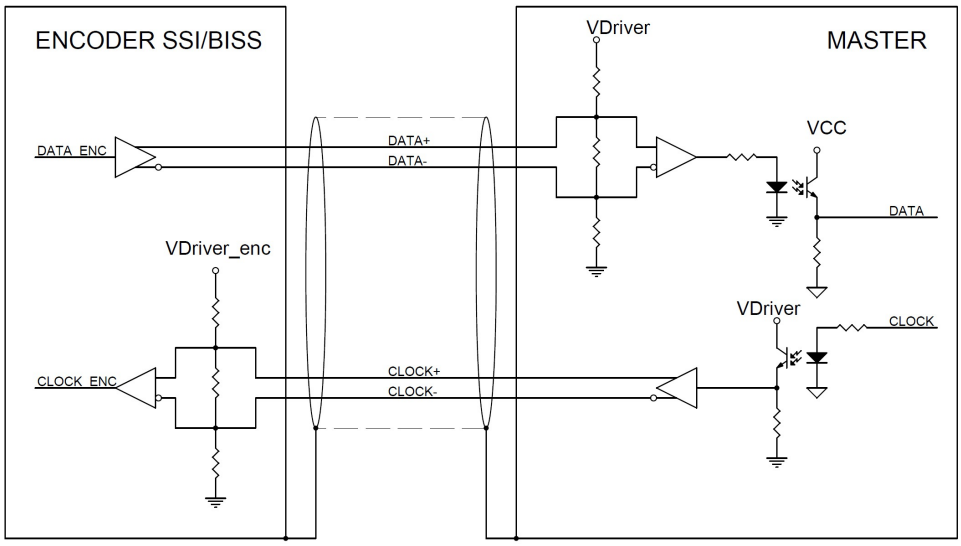

6 - BiSS C-mode interface
Order code: AMM80xx/xxxSC1-...

Lika encoders are always Slave devices and comply with the "BiSS C-mode interface" and the "Standard encoder profile".
Refer to the official BiSS website for all information not listed in this manual (www.biss-interface.com).
The device is designed to work in a point-to-point configuration and must be installed in a "single Master, single Slave" network.
CLOCK IN (MA) and DATA OUT (SLO) signal levels are according to the "EIA standard RS-422".

WARNING
Never install the encoder in a "single Master, multi Slave" network.

6.1 Communication

The BiSS C-mode protocol uses two types of data transmission protocols:

- **Single Cycle Data (SCD):** it is the main data transmission protocol. It is used to send process data from the Slave to the Master. For any information refer to the "6.2 Single Cycle Data SCD" section on page 35.
- **Control Data (CD):** transmission of a single bit following the SCD data. It is used to read or write data into the registers of the Slave. For any information refer to the "6.3 Control Data CD" section on page 37.

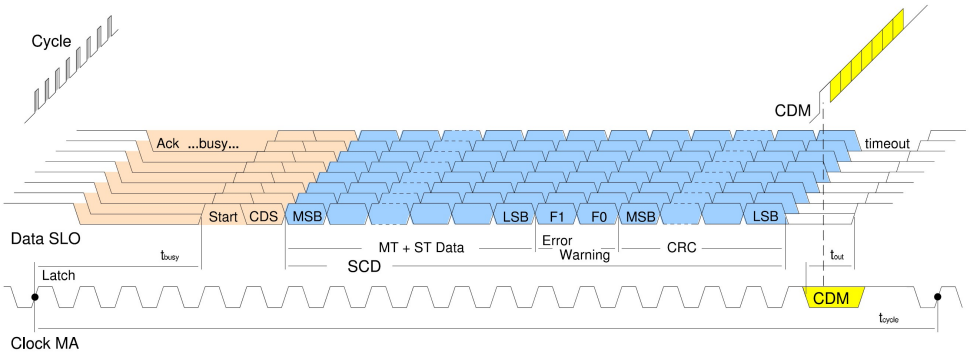

6.2 Single Cycle Data SCD

6.2.1 SCD structure

SCD data has a variable length according to the resolution of the encoder. It is nbitres+7 long where "nbitres" is the resolution of the encoder expressed in bits. It consists of the following elements: position value (**Position**), 1 error bit nE (**Error**), 1 warning bit nW (**Warning**) and a 6-bit CRC Cyclic Redundancy Check (**CRC**).

bit	nbitres+7 ... 8	7	6	5 ... 0
function	Position	Error	Warning	CRC

Position
(Nbitres)
It is the process data transmitted from the Slave to the Master. It has a variable length, it is as long as the resolution of the encoder expressed in bits.
The transmission starts with msb (most significant bit) and ends with lsb (least significant bit). "Nbitres" is the resolution of the encoder expressed in bits.

bit	Nbitres+7	...	...	8
value	msb	...	...	lsb

"Nbitres" is the resolution of the encoder expressed in bits. It is comprised between 17 bits and 39 bits a shown in the following table.

Order code	Encoder resolution
AMM8017/1SC1...	17 bits
AMM8020/1SC1...	20 bits
AMM8023/1SC1...	23 bits
AMM8017/65KSC1...	17 + 16 bits
AMM8020/65KSC1...	20 + 16 bits
AMM8023/65KSC1...	23 + 16 bits

Error
(1 bit)
It is intended to communicate the normal or fault status of the Slave.
When nE = "0" (low active), an error is active in the system.

1. It indicates that an error is active, such as for instance an incorrect alignment between the circuitry and the disk:
   - the gap between the circuitry and the disk is out of tolerance
   - the circuitry is not installed properly

2. The battery is spent. The encoder cannot operate. You are required to replace the battery. See the "4.5.2 Replacement of the battery – ERROR active" section on page 26.

nE = "1": no active error
= "0": error status: an error is active in the system.

Warning
(1 bit)
It is intended to communicate the normal or fault status of the Slave.
When nW = "0" (low active), a warning is active in the system.

1. It indicates that an error has occurred in the magnetic multiturn system. The level is high "1" when the multiturn system is operating properly.
2. The battery charge level is low. You are required to replace the battery as soon as possible. See the "4.5.1 Replacement of the battery – No ERROR active" section on page 25.

nW = "1": no active warning
= "0": warning status: a warning is active in the system.

CRC
(6 bits)
Correct transmission control (inverted output). Cyclic Redundancy Check is an error checking which is the result of a "Redundancy Check" calculation performed on the message contents. This is intended to check whether transmission has been performed properly. It is 6-bit long.
Polynomial: X^6+X^1+1 (binary: 1000011)

Logic circuit

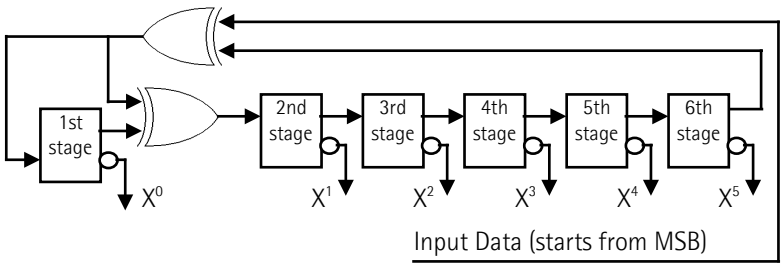

6.3 Control Data CD

Main control data is described in this section. Please refer to the official BiSS documents for complete CD structure: "BiSS C Protocol Description" in the BiSS homepage.

Register address
It sets the number of the register you need either to read or to write. It is 7-bit long.

RW
RW = "01": when you need to write in the register.
RW = "10": when you need to read in the register.
It is 2-bit long.

DATA
When you need to write in a register (**RW** = "01"), it allows to enter the value to be written in the register (transmitted from the Master to the Slave).
When you need to read in a register (**RW** = "10"), it shows the value read in the register (transmitted from the Slave to the Master).
It is 8-bit long.

Data bit structure:

bit	7	...	...	0
	msb	...	...	lsb

CRC
Correct transmission control (inverted output). Cyclic Redundancy Check is an error checking which is the result of a "Redundancy Check" calculation performed on the message contents. This is intended to check whether transmission has been performed properly. It is 4-bit long.
Polynomial: X^4+X^1+1 (binary: 10011)

Logic circuit:

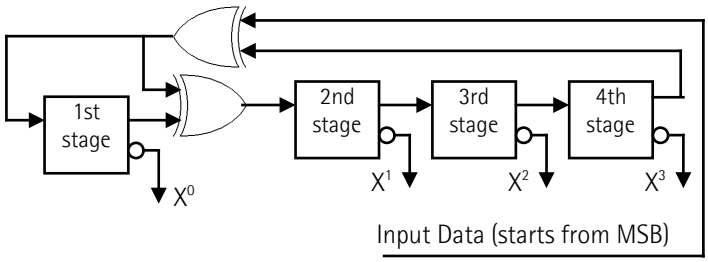

6.4 Implemented registers

Register (hex)	Function
11 ... 17	Preset
40	Preset setting enable
44 ... 47	Serial number
77	Command
78 ... 7D	Device ID
7E - 7F	Manufacturer ID

All registers described in this section are listed as follows:

Function name
[Address, Attribute]
Description of the function and specification of the default value.

- Address: the register address is expressed in hexadecimal notation.
- Attribute: ro = read only
  rw = read and write
  wo = write only
- Default parameter value is written in **bold**.

Preset

[11 ... 17, rw]

WARNING
You are allowed to enter a value next to the Preset registers only after having set the value "01" next to the Preset setting enable register. As soon as you have entered the desired preset value, you must set the value "00" next to the Preset setting enable register and then save data.

These registers allow the operator to set the Preset value. The Preset function is meant to assign a desired value to a physical position of the encoder. The chosen physical position (i.e. the transmitted position value) will get the value set next to these registers and all the previous and following positions will get a value according to it. For instance, this can be useful for getting the zero point of the encoder and the zero point of the application to match. The preset value will be set for the position of the encoder in the moment when the command is sent through the **Activate Preset** function of the Command register.

After having entered a value next to the Preset registers you can either save it without activating the preset function or both save and activate it. Use the **Save parameters** function (set "01" in the Command register) to save the new Preset value without activating it.
If you want to activate the new Preset value, after saving use the **Activate Preset** function (set "02" in the Command register).

The Preset value must be less than the "Total Hardware resolution".

NOTE
We suggest setting the preset when the encoder shaft is in stop.

NOTE
Please note that the bit structure of the **Preset** registers is as follows:

Byte 11							
7	6	5	4	3	2	1	0
0	0	0	0	0	0	0	0
Always set to 0							

Byte 12							
15	14	13	12	11	10	9	8
						0	0

Byte 13							
23	22	21	20	19	18	17	16

Byte 14							
31	30	29	28	27	26	25	24

Byte 15							
39	38	37	36	35	34	33	32

lsbit with 23-bit encoder

lsbit with 20-bit encoder

lsbit with 17-bit encoder

Byte 16							
47	46	45	44	43	42	41	40

Byte 17							
55	54	53	52	51	50	49	48
0	0	0	0	0	0	0	
Always set to 0							

msbit with all encoders

NOTE
Please note that:

- bytes 11, 12, 13, 14 and bit 32 of byte 15 are used for singleturn information;
- bit 32 of byte 15 is the msbit of the singleturn information and is kept fixed;
- lsbit of the singleturn information changes according to the resolution of the encoder, it is:
  - bit 16 for 17-bit singleturn resolution;
  - bit 13 for 20-bit singleturn resolution;
  - bit 10 for 23-bit singleturn resolution;
- bits 33 to 39 of byte 15 and bytes 16 and 17 are used for multiturn information;
- bit 48 of byte 17 is the msbit of the multiturn information and is kept fixed;
- bit 33 of byte 15 is the lsbit of the multiturn information and is fixed because the number of revolutions is always 65,536 (16 bits) in all models;
- bits from 49 to 55 in byte 17 are always set to 0;
- bits 8 and 9 in byte 12 are always set to 0;
- all bits in byte 11 are always set to 0.

To properly set the **Preset** value see the following example.

PRESET SETTING EXAMPLE

In the 20-bit resolution encoder (2^{20} = 1,048,576 information), you want to set the following **Preset** value = $1{,}000{,}003_{10}$ = 0F4243h = 1111 0100 0010 0100 0011_2.

1. As previously stated, first of all you must enable the setting of the **Preset** registers by entering the value "01" next to the **Preset setting enable** register.

2. Then enter the **Preset** value ($1{,}000{,}003_{10}$ = 1111 0100 0010 0100 0011_2) according to the structure explained above. Please note that you must enter the value in the 20-bit long format (according to the encoder resolution), so it is:
   00000000000000001111010000100100001 1 in binary notation. See the following table:

Byte 11							
7	6	5	4	3	2	1	0
0	0	0	0	0	0	0	0

Byte 12							
15	14	13	12	11	10	9	8
0	1	1	0	0	0	0	0

lsbit with 20-bit encoder

Byte 13							
23	22	21	20	19	18	17	16
0	1	0	0	1	0	0	0

Byte 14							
31	30	29	28	27	26	25	24
1	1	1	0	1	0	0	0

Byte 15							
39	38	37	36	35	34	33	32
0	0	0	0	0	0	0	1

Byte 16							
47	46	45	44	43	42	41	40
0	0	0	0	0	0	0	0

Byte 17							
55	54	53	52	51	50	49	48
0	0	0	0	0	0	0	0

msbit with 20-bit encoder

3. It results that you must enter the following hexadecimal value:

Byte 11							
0	0	0	0	0	0	0	0
0						0	

Byte 12							
0	1	1	0	0	0	0	0
6						0	

Byte 13							
0	1	0	0	1	0	0	0
4						8	

Byte 14							
1	1	1	0	1	0	0	0
E						8	

Byte 15							
0	0	0	0	0	0	0	1
0						1	

Byte 16							
0	0	0	0	0	0	0	0
0						0	

Byte 17							
0	0	0	0	0	0	0	0
0						0	

4. Then, before saving the entered data, set the value "00" next to the **Preset setting enable** register.

5. To save the new Preset value, you must use the **Save parameters** function in the **Command** register (set "01" in the **Command** register).

6. To activate the new Preset value, you must use the **Activate Preset** function in the **Command** register (set "02" in the **Command** register).

Function	ADDR	DATA Tx
Preset setting enable	40	01

Writing in the Preset registers	11	00
	12	60
	13	48
	14	E8
	15	01
	16	00
	17	00

Preset setting enable	40	00

Save parameters function in the **Command** register	77	01

Activate Preset function in the **Command** register	77	02

Preset setting enable

[40, wo]

It allows the operator to enable the setting of the **Preset** registers. You are allowed to set a new preset value only after having entered the value "01" next to this **Preset setting enable** register. As soon as you have entered the desired preset value, you must set the value "00" next to this **Preset setting enable** register and then save data.

Serial number

[44 ... 47, ro]

These registers contain the serial number of the device expressed in hexadecimal notation. They are intended to inform about the year of production, the week of production and the serial number in ascending order.

The read value must be interpreted as shown in the following example:

Register	44	45	46	47
Hex	0A	E8	69	EE
Dec	18 30 03630			

18 = year of production (first two digits)

30 = week of production (third and fourth digit)
03630 = serial number in ascending order (remaining digits)

Command

[77, wo]

Value	Function
01	**Save parameters**
02	**Activate Preset**

After having set a new value in any register use the **Save parameters** function in the **Command** register to save the new value. Set "01" in the **Command** register.
After having set a new value in the **Preset** register use the **Activate Preset** function in the **Command** register to activate the preset function. Set "02" in the **Command** register.
After having sent the command the register is set back to "00" automatically.
Wait 30 ms at least (EPROM writing time) before activating a new function.

Device ID

[78 ... 7D, ro]
These registers contain the Device ID (name and hardware-software release). Identification name is expressed in hexadecimal ASCII code.
Registers 78 ... 7B show the name of the device.
Registers 7C and 7D show the hardware-software release.
Device ID registers structure:

Register	78	79	7A	7B	7C	7D
	2^{47} ... 2^{40}	2^{39} ... 2^{32}	2^{31} ... 2^{24}	2^{23} ... 2^{16}	2^{15} ... 2^{8}	2^{7} ... 2^{0}
Hex	**41**	**4D**	**4D**	**38**	**xx**	**xx**
ASCII	**A**	**M**	**M**	**8**	**xx**	**xx**

Manufacturer ID

[7E – 7F, ro]
These registers contain the Manufacturer ID. Identification name is expressed hexadecimal ASCII code.

Register	7E	7F
Hex	4C	69
ASCII	L	i

Li = Lika Electronic

6.5 Application notes

Data transmission:

Parameter	Value
Clock Frequency	min 50 kHz, max 10 MHz
BiSS time-out	Self-adaptable to the clock

Time-out is self-adaptable to the clock frequency. It is 1.5 * 1 / clock frequency.
If clock frequency = 50 kHz, then the time-out is 30 µs.
If clock frequency = 200 kHz, then the time-out is 7.5 µs.
If clock frequency = 10 MHz, then the time-out is 150 nsec.

6.6 Recommended BiSS input circuit

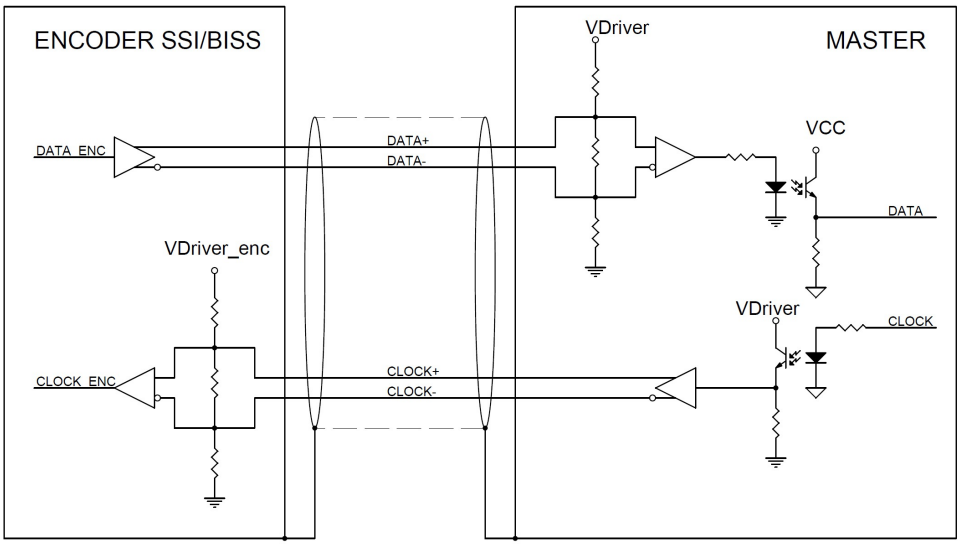

7 – RS-485 serial interface
Order code: AMM80xx/xxJP1-...

7.1 RS-485 port settings

Serial port settings are as follows:

Serial port settings	Value
Baud rate (Mbit/s)	2.5
Byte size	8
Parity	None
Stop bits	1
Flow control	None

7.2 Frame format

The following abbreviations are used in the next sections:

CF : Control Field, see the "7.3.1 Control Field" section on page 45

SF : Status Field, see the "7.3.2 Status Field" section on page 45

DF : Data Field, see the "7.4 Data Field" section on page 46

ADF : Address Field, see the "7.5 Address Field and EEPROM Data Field" section on page 49

EDF : EEPROM data (to be written to or to be read from), see the "7.5 Address Field and EEPROM Data Field" section on page 49

CRC : CRC Field, see the "7.6 CRC Field" section on page 50

7.2.1 Encoder data capture and reset

Master → Encoder

CF

Encoder → Master

CF	SF	DF0	DF1	...	DF7	CRC

7.2.2 Write register

Master → Encoder

CF	ADF	EDF	CRC

Encoder → Master

CF	ADF	EDF	CRC

7.2.3 Read register

Master → Encoder

CF	ADF	CRC

Encoder → Master

CF	ADF	EDF	CRC

7.3 Field detail

7.3.1 Control Field

Control Field CF is related to Data Field DF, for a correct Data ID see the "7.4 Data Field" section on page 46.

Frame type	Data ID	CF value
Data capture	Data ID 0 (singleturn value)	02h
	Data ID 1 (multiturn value)	8Ah
	Data ID 2 (fixed value = 23h)	92h
	Data ID 3	1Ah
Writing the register	Data ID 6	32h
Reading the register	Data ID D	EAh
Resetting data/errors	Data ID 7 (singleturn value)	BAh
	Data ID 8 (singleturn value)	C2h
	Data ID C (singleturn value)	62h

7.3.2 Status Field

Status Field SF is configured as follows:

Bit 7	Bit 6	Bit 5	Bit 4	Bit 3	Bit 2	Bit 1	Bit 0
0	0	EE_1	EE_0	EI_3	EI_2	EI_1	EI_0

EI: All Encoder Information bits have fixed value = "0"

EE: Encoder Error bits
EE_0 = "1" → **ST error**;
EE_1 = "1" → **BUSY flag**, **PS error**, **Battery alarm**, or **MT error**

7.4 Data Field

Data Field DF is related to Control Field CF, for a correct Data ID see the "7.3.1 Control Field" section on page 45.

Data ID	DF0	DF1	DF2	DF3	DF4	DF5	DF6	DF7
Data ID 0	ABS0	ABS1	ABS2					
Data ID 1	ABM0	ABM1	ABM2					
Data ID 2	ENID							
Data ID 3	ABS0	ABS1	ABS2	ENID	ABM0	ABM1	ABM2	ALMC
Data ID 7	ABS0	ABS1	ABS2					
Data ID 8	ABS0	ABS1	ABS2					
Data ID C	ABS0	ABS1	ABS2					

Blank field means that no byte is transmitted.
Position is transmitted from LS byte to MS byte in binary output code.
High bits that are not used have fixed value = "0".

ABS : absolute value data within singleturn information, ABS0 is the low byte, ABS2 is the high byte.

ABM : multiturn data, ABM0 is the low byte, ABM2 is the high byte.

ENID : encoder ID, fixed value = 23h

ALMC : encoder error, see the ALMC table below

ALMC byte (the bit is high = "1" upon error occurrence):

Bit 7	Bit 6	Bit 5	Bit 4	Bit 3	Bit 2	Bit 1	Bit 0
Battery alarm BATT	**MT error** MTERR	**PS error** PSERR	Fixed to "0"	Fixed to "0"	**ST error** STERR	**BUSY flag** BUSY	Fixed to "0"

See the next "7.4.1 Encoder errors" section.

7.4.1 Encoder errors

See the ALMC byte in the previous "7.4 Data Field" section.

Flag	Explanation	How to clear
BUSY flag (BUSY)	Function: There is a delay which is needed for the encoder to successfully process data at power-on. Or the encoder is accomplishing a reset command. The flag shows that the encoder is not ready to process data, logical value "1" is outputted. All position data for this period are fixed to "0". After the delay has expired, logical value is returned to "0". Detection timing: upon normal operation (when the main power is turned on) Output: Non latch	Auto clear (turning speed is decreased to 300 rpm or less)
PS error (PSERR)	Function: it is intended to monitor the synchronization between the "Singleturn counting" and the "Multiturn counting". It further warns about a counting error. Detection timing: upon normal operation Output: Latch	Turn on the main power twice or reset the error (ID 7, ID C, see the next section)
ST error (STERR)	The alarm is triggered if a period counter consistency error occurs. An error occurred while checking counted data and calculated data. Detection timing: in normal operation Output: Latch	Turn on the main power twice or reset the error (ID 7, ID C, see the next section)
Battery alarm (BATT)	Function: the alarm is triggered when external battery voltage falls below 3.15V. Detection timing: in normal operation Output: Latch	Reset the error (ID 7, ID C, see the next section)
MT error (MTERR)	Function: the alarm is triggered when the external battery voltage falls below 3.05V. Detection timing: in normal operation Output: Latch	Reset the error (ID 7, ID C, see the next section)

7.4.2 Resetting an error

Function	Data ID	Description
Singleturn and multiturn data resetting	Data ID 8	Data ID must be transmitted to the encoder 10 times in succession at transmission intervals of 40 µs or more while the shaft is in stop. Singleturn and multiturn data is reset to "0". Once the shaft position is reset, its position is kept even after the main power is turned off, whether external battery is connected or not.
Multiturn data and all errors resetting	Data ID C	Data ID must be transmitted to the encoder 10 times in succession at transmission intervals of 40 µs or more. Multiturn data only is reset (singleturn data is not reset). In addition, all latch errors (**PS error**, **ST error**, and **MT error**) are reset at the same time.
All errors resetting	Data ID 7	Data ID must be transmitted to the encoder 10 times in succession at transmission intervals of 40 µs or more. All latch errors (**PS error**, **ST error**, and **MT error**) are reset at the same time.

NOTE

- When the error is reset by using Data ID C or Data ID 7, resetting should be executed while the encoder shaft is in stop (rotational speed 300 rpm or less). In addition after having received Data ID 10 times, the encoder outputs **BUSY flag** for max. 2 ms in order to operate resetting process.
- Singleturn data resetting takes 18 ms max. to execute the resetting after Data ID 8 is received 10 times because the process of writing data into EEPROM is executed.

EXAMPLE

Transmission of singleturn encoder position: Data ID 0

Master → Encoder

02h

Encoder → Master

02h	SF	DF0	DF1	DF2	CRC

Singleturn encoder position:
DF0: LS byte
DF2: MS byte
position = (DF2 << 16) + (DF1 << 8) + DF0;

with 23 bit resolution:

23	Bit 22 ...	0
0	singleturn encoder position	

with 20 bit resolution:

23	22	21	20	Bit 19 ...	0
0	0	0	0	singleturn encoder position	

with 17 bit resolution:

23	22	21	20	19	18	17	Bit 16 ...	0
0	0	0	0	0	0	0	singleturn encoder position	

7.5 Address Field and EEPROM Data Field

Address field:

Bit 7	Bit 6	Bit 5	Bit 4	Bit 3	Bit 2	Bit 1	Bit 0
ADD6	ADD5	ADD4	ADD3	ADD2	ADD1	ADD0	MEM BUSY

ADD6 ... ADD0: EEPROM address

MEM BUSY status: access status to EEPROM can be judged by MEM BUSY status. The relationship between MEM BUSY status and the transmission data from the encoder is referred to next table;
from Master to encoder MEM BUSY must be "0".

	Encoder transmission data			Description
	MEM BUSY	ADF	EDF	
Reading	0	ADF of request	EEPROM normal data	Reading is normally executed
	1	ADF of request	00h	Writing is being executed Request for reading is invalid
Writing	0	ADF of request	EDF of request	Request for writing is received
	1	ADF of	00h	Writing is being executed

		request		Request for writing is invalid

When **MEM BUSY** status of transmission data from the encoder is logical value "1" = Writing is being executed, the writing process based upon the request is not executed.
For checking out that the process of writing data into EEPROM has been carried out properly, the check is to be conducted by transmitting [Request for reading (Data ID D)].

EEPROM data field: 8-bit data

Bit 7	Bit 6	Bit 5	Bit 4	Bit 3	Bit 2	Bit 1	Bit 0
MS bit	...						LS bit

7.6 CRC Field

Generation algorithm in accordance with $G(X) = X^8 + 1$
Data is configured in accordance with LSB first.
Calculation is executed to all 8 bits except for Start bit and Delimiter of fields rather than CRC.

EXAMPLE

Master → Encoder

CF
02h

Encoder → Master

CF	SF	DF0	DF1	DF2	DF3	CRC
32h	10h	01h	28h	B0h	08h	B3h

Example of code

```
UCHAR MakeCRC(char *BitString)
{
    CRC8 = 0;
    char CRC[8];
    UINT  i;
    char DoInvert;
```

```
   for (i=0; i<8; ++i)  CRC[i] = 0;// Init before
calculation

   for (i=0; i<strlen(BitString); ++i)
   {
       DoInvert = ('1'==BitString[i]) ^ CRC[7];//
XOR required?
       CRC[7] = CRC[6];
       CRC[6] = CRC[5];
       CRC[5] = CRC[4];
       CRC[4] = CRC[3];
       CRC[3] = CRC[2];
       CRC[2] = CRC[1];
       CRC[1] = CRC[0];
       CRC[0] = DoInvert;
   }

   for (i=0; i<8; ++i)  CRC8 += CRC[i] ? (1<<i) :
0;

   return(CRC8);
}
```

8 - Sine/Cosine output signals

NOTE
Sine/Cosine output signals are only available in SSI (...BG1... order code) and BiSS (...SC1... order code) models.

A (COSINE) and B (SINE) signals are to be intended with CW rotation as viewed from the shaft side. They provide 1,024 sinusoidal waves per mechanical revolution with amplitude 1Vpp. 1Vpp output level results from differential signals detection. The frequency of output signals is proportional to the rotational speed of the encoder.

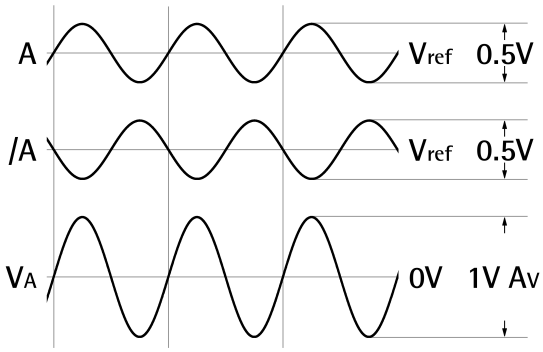

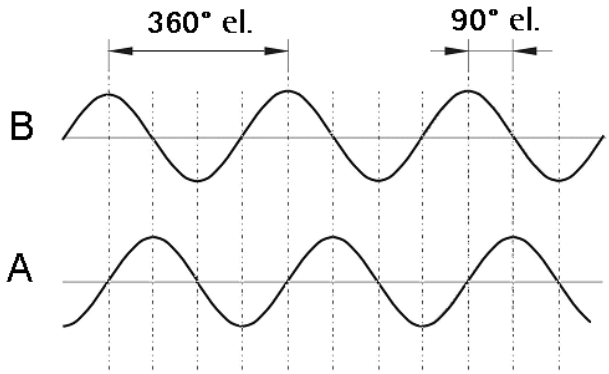

8.1 Output signals voltage level

The voltage level refers to the differential value between normal and inverted signal (differential).

Recommended input circuit

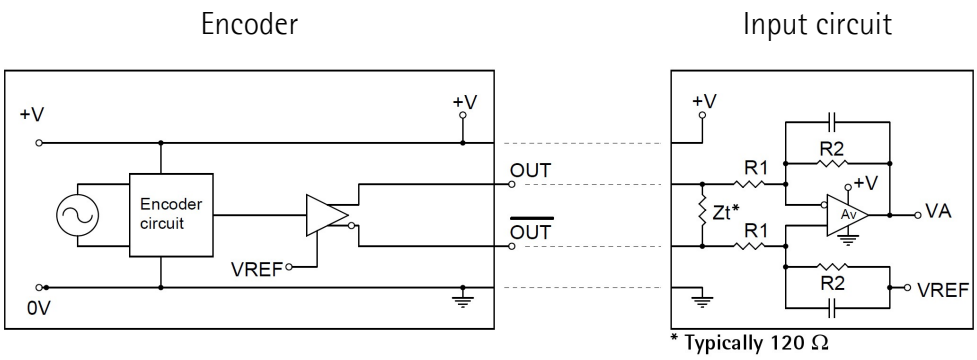

V_{REF} = 2.5V ± 0.5V V_A = 1Vpp * Av Av = R2 / R1

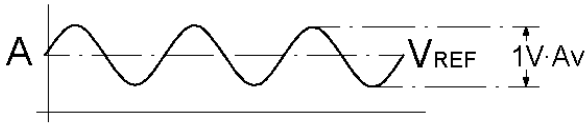

9 - Diagnostic LEDs

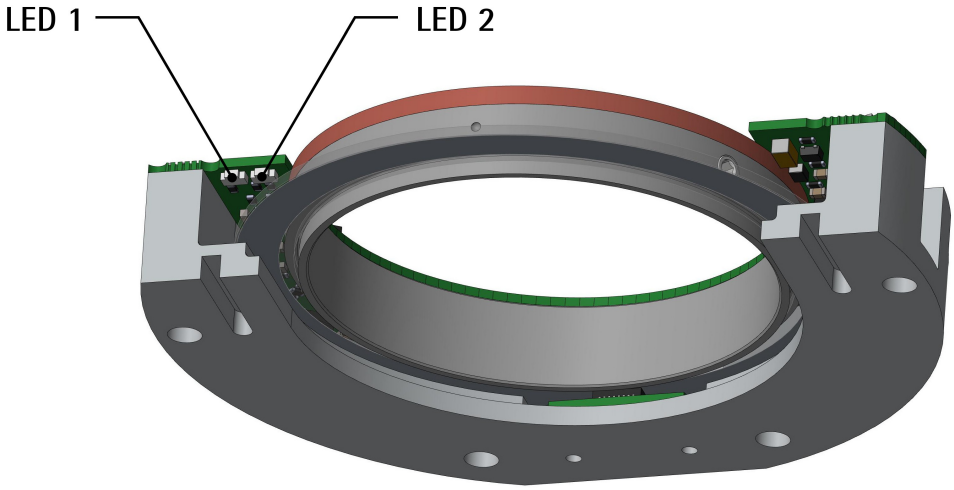

The encoder is equipped with two LEDs, they are meant to show visually a fault condition during operation.
When you install the encoder, as soon as the power supply is switched on (see **Step 8**), the LEDs blink for a while and then go off, if the installation procedure is successful.
If at the end of the operation a LED is still on, please repeat the installation procedure again.
Refer also to the "3 - Mounting instructions" section on page 12.

LED 1 (ERROR)

1. When the LED 1 lights up RED during normal operation, it indicates that an error is active, such as for instance an incorrect alignment between the circuitry and the disk:
   - the gap between the circuitry and the disk is out of tolerance
   - the circuitry is not installed properly
2. The LED 1 lights up RED when the battery is spent. The encoder cannot operate. You are required to replace the battery. See the "4.5.2 Replacement of the battery – ERROR active" section on page 26. See the MT error on page 47.

NOTE
When the LED 1 is off during normal operation, this means that the encoder is working properly and the absolute position is output correctly.

LED 2 (WARNING)

1. When the LED 2 lights up RED during normal operation, it indicates that an error has occurred in the magnetic multiturn system.
   It is off when the multiturn system is operating properly.
2. The LED 2 lights up RED when the battery charge level is low. You are required to replace the battery as soon as possible. See the "4.5.1

Replacement of the battery – No ERROR active" section on page 25. See the **Battery alarm** on page 47.

10 - Default parameters list

BiSS C-mode interface

Parameters list	Default value *		
Preset	00 00 00 00 00		
Preset setting enable	00		

* All values are expressed in hexadecimal notation.

This page intentionally left blank

This page intentionally left blank

This page intentionally left blank

Document release	Release date	Description	HW	SW	Interface
1.0	12.06.2019	First issue	-	-	-
1.1	31.07.2019	Counting direction information updated, 3B **Counting direction** register removed. **Command** register updated.	-	-	-
1.2	11.11.2019	Mechanical drawings updated	-	-	-
1.3	14.01.2020	Pin 1 connected to ground	-	-	-
1.4	22.04.2020	SSI and RS-485 version added, Italian version	-	-	-
1.5	06.05.2020	BiSS registers 44 ... 47 and 78 ... 7D updated	-	-	-

Dispose separately

Lika Electronic
Via S. Lorenzo, 25 • 36010 Carrè (VI) • Italy

Tel. +39 0445 806600
Fax +39 0445 806699

info@lika.biz • www.lika.biz